Item	Name	Q.ty
1	CA.08.14.013	1
2	GGD.10.05.05	1
3	M.10.5x28	1
4	SAE.10050510.1	1
5	SAE.10050510.2	1
6	SAE.10050510.3	1
7	SAE.10050510.4	2

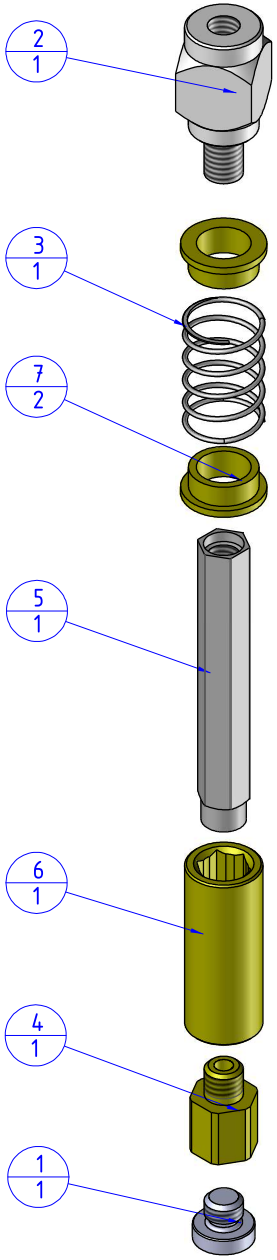

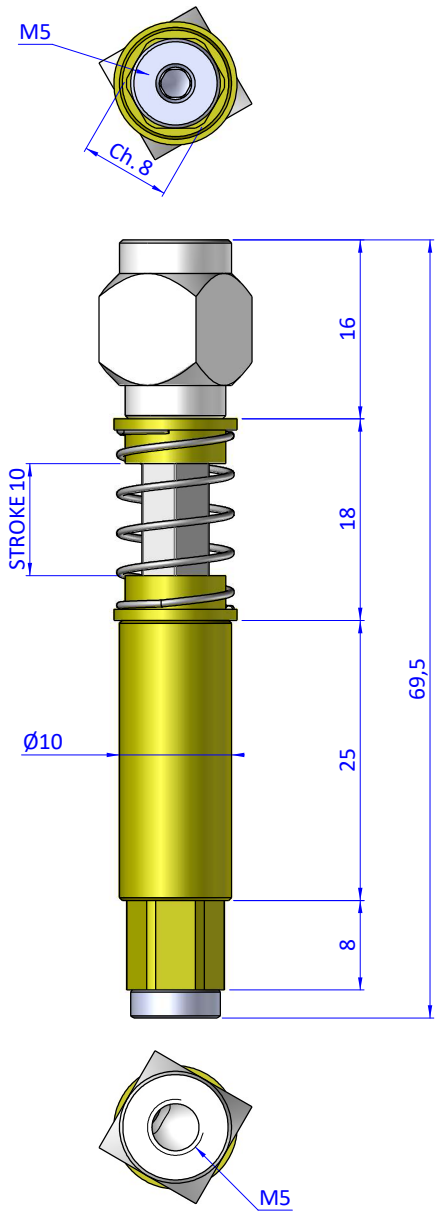

THE PROPERTY OF THE DRAWING IS ESTABLISHED BY LAW. IT IS FORBIDDEN TO PRODUCE OR SHOW IT TO THIRD PART WITHOUT A WRITTEN AGREEMENT.

Format A3
UNI 936-76

FPS
FPSERVICES AUTOMATION

GENERAL TOLERANCE UNI - ISO 2768 CLASSE f	DESCRIPTION CA.SAE.1010.GGD	DESIGNED FROM FPS Automation	REVIEW A
		DATE 25/08/2026	WEIGHT 0,028kg
		CODE CA.SAE.1010.GGD	